REVISION DATA				
SYM	ECN	DESCRIPTION	DATE	APPROVED

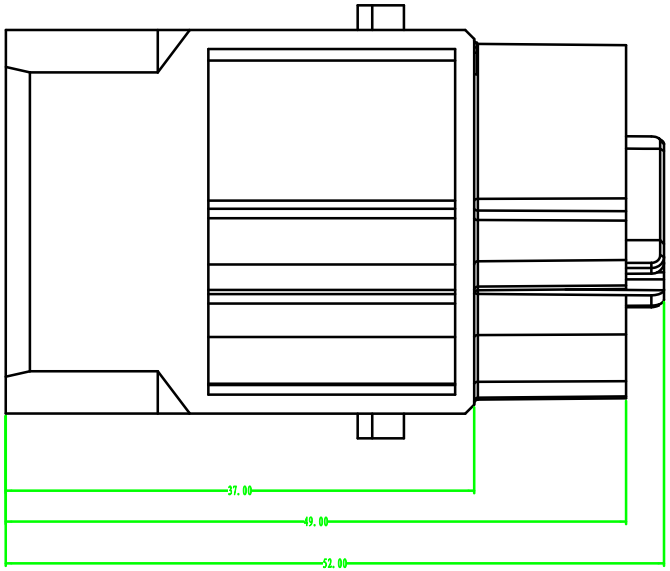

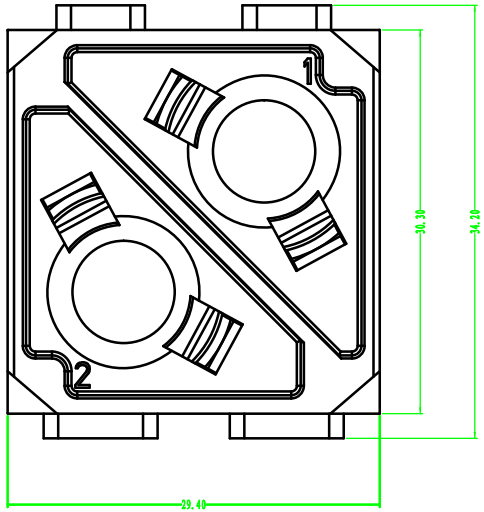

技术参数:

插芯:

- 插针数: 2
- 额定电流: 100A
- 额定电压: 1000V
- 额定脉冲电压: 8kV
- 污染等级: 3
- 绝缘阻抗: ≥10^{10}Ω
- 材料: 聚碳酸酯
- 颜色: RAL 7032(浅灰色)
- 温度范围: -40℃ - +125℃
- 依据UL 94的阻燃等级: V0
- 可插拔次数: ≥500

插针:

- 接线方式: 冷压连接
- 材料: 铜合金
- 表面处理: 镀银
- 接触电阻: ≤0.3mΩ
- 线径范围: 10-35mm^2
- 最大电缆直径: 14mm

Technical specification:

Insters:

- No. of contact: 2
- Rated current: 100A
- Rated voltage: 1000V
- Rated impulse voltage: 8kV
- Pollution degree: 3
- Insulation resistance: ≥10^{10}Ω
- Material: polycarbonate
- Colour: RAL 7032(light grey)
- Temperature range: -40℃ - +125℃
- Flammability acc.to UL 94: V0
- Mating cycles: ≥500

Contacts:

- Terminal: crimp terminal
- Material: copper alloy
- Surface: hard-silver plated
- Contact resistance: ≤0.3mΩ
- Wire gauge: 10-35mm^2
- Max. insulation diameter: 14mm
- Stripping length: 14mm

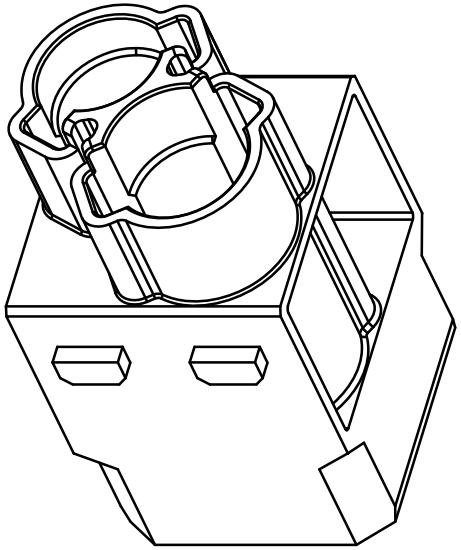

Tolerance		SIGNATURE	DATE	Units	mm	OUKERUI® 宁波欧科瑞连接器有限公司 NINGBO OUKERUI CONNECTOR CO.,LTD.		
0~≤20 ±0.15	DRAW			Size	A4			
20~≤50 ±0.25	DESIGN			Scale		PART NAME: HZW-H2MK-002-MC		
50~≤80 ±0.35	CHECK			Sheet		Drawing NO.		REV
80~≤120 ±0.50	APPROVE			Proj.		Material		A