REVISION DATA				
SYM	ECN	DESCRIPTION	DATE	APPROVED

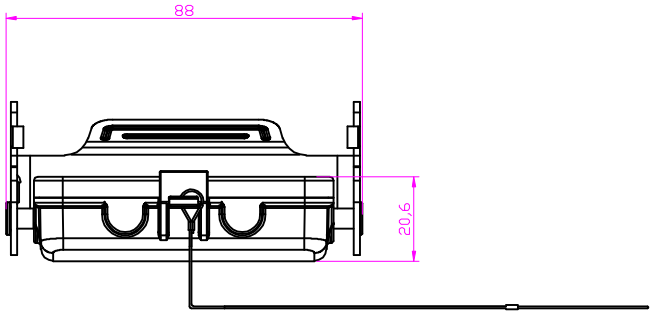

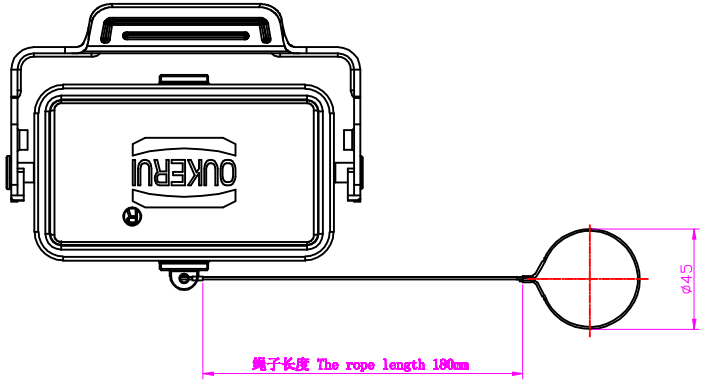

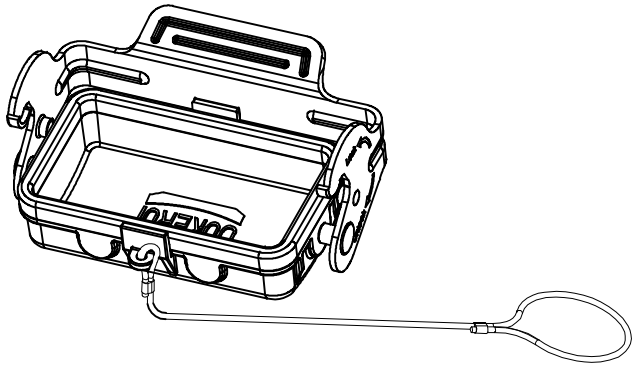

技术参数：
材料：压铸铝
表面处理：粉末喷涂
颜色：RAL7037灰色
温度范围： -40℃～+125℃
防护等级：IP65(联锁状态)
联锁元件
锁扣方式：金属单扣
材料：不锈钢
密封元件：NBR

Specifications:
Material: aluminium die-cast
Surface: powder-coated
Color: Grey(RAL 7037)
Limiting temperatures: -40℃～+125℃
Degree of protection : IP65
Locking element :
Locking type: single locking latch
material: stainless steel
Hoods/Housings sealing:NBR

Tolerance		SIGNATURE	DATE	Units	mm	宁波欧科瑞连接器有限公司 NINGBO OUKERUI CONNECTOR CO.,LTD.		
0～≤20 ±0.15	DRAW			Size	A4			
20～≤50 ±0.25	DESIGN			Scale		PART NAME: HZW-H10B-MCV-1PL		
50～≤80 ±0.35	CHECK			Sheet		Drawing NO.		REV
80～≤120 ±0.50	APPROVE			Proj.		Material		A