REVISION DATA				
SYM	ECN	DESCRIPTION	DATE	APPROVED

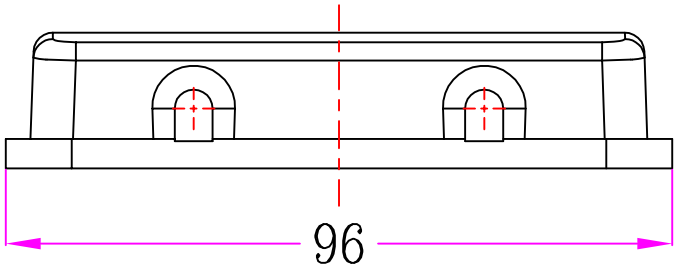

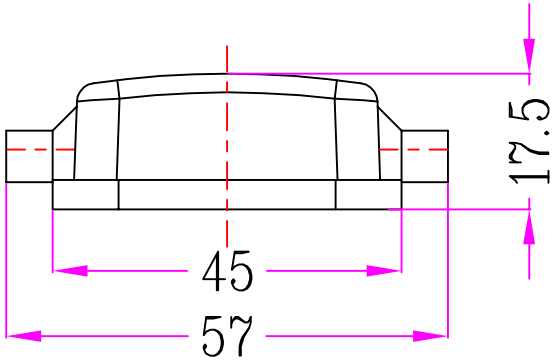

	SIGNATURE	DATE	Units	mm	宁波欧科瑞连接器有限公司 NINGBO OUKERUI CONNECTOR CO.,LTD.		
DRAW			Size	A4			
DESIGN	杨涛辉	11.08.13	Scale		TYPE NAME	HZW-H16B-CV-4g	
CHECK			Sheet	1/1	Part number	81 303 016 222	REV
APPROVE			Proj.		File path	OKR.16B.H16BV	A0